ENGINE POWERED ARTICULATING BOOM LIFTS

AB15J PLUS (AB480J PLUS)

Compliant with GB/CE/ANSI/CSA/AS/EAC standards

HIGHLIGHTS

Excellent Rough Terrain Performance

- The machine features great rough terrain performance thanks to its active oscillating function, combined with 4 wheel drive, 40% gradeability and high ground clearance making it easily adaptive to both indoor and outdoor applications

Large Platform Capacity

- Two persons with tools can be easily loaded in the platform to complete jobs efficiently by its leading platform capacity up to 300 kg

Efficient Hydraulic System

- Function pump updated from gear pump to piston pump, could providing more oil flow and higher oil pressure, make the multi boom function better, improve the operation efficiency

Greater Tilt Rating

- The machine can be easily adaptive to terrains where requires greater tilt rating and help to boost work efficiency

Ultimate HMI Experience

- Easy trouble shooting, manuals free. One button for fault inquiry, and all faults will be displayed on the screen without codes, easily readable to minimize downtime
- Easy calibration, tools free. Additional tools are not needed for calibration, all are in the screen

Standard Features		
Full-time oscillation	Four-wheel brake	Four-wheel drive/Two-wheel steer
Continuous turntable rotation in 360°	7-in smart screen	Fault diagnosis system
Hydraulic leveling for platform	Platform rotation function	Weighing system
Tilt protection system	Max allowable tilt angle at 5°	Rear position and travel confirmation
Rotating warning light for safety warning	Horn and buzzer for safety warning	Mechanical release for travel braking
Emergency stop system	Emergency lowering system	Rotatable engine
Proportional control with 3 joysticks	Automotive sleeves for all pipes	Engine preheating
Anti-restart protection for engine	Automatic engine shutdown in case of Malfunction	Anti-pinch device
Platform with inward swinging gate(1.83 x 0.85 x 1.1 m)	Divider/combiner anti-slip system	Active oscillating function
Options & Accessories		
AC power line to the platform	Solid tire	Non-marking tire
Anti-collision device	Platform (1.45 x 0.85 x 1.1 m)	Working light on the platform
Half-height guardrail (for platform with inward swinging gate)	Anti-pinch hand device	Manual storage box
Telematics-ready connector	Tool box (for platform with inward swinging gate)	White noise
Un-continuous turntable rotation		

SINOBOOM™

PARTNERS IN ACCESS™

SINOBOOM.US | SALES@SINOBOOM.US

105 W RILEY ROAD, HOUSTON TX 77047

ENGINE POWERED ARTICULATING BOOM LIFTS

AB15J PLUS (AB480J PLUS)

Compliant with GB/CE/ANSI/CSA/AS/EAC standards

Model	AB15J Plus (AB480J Plus)
Dimensions	
Max Platform Height	14.7 m (48'3")
Max Working Height	16.7 m (54'9")
Max Horizontal Reach	8.5 m (27'11")
Max Horizontal Working Envelope	9.1 m (29'10")
Max Up and Over Clearance	7.3 m (23'11")
A Stowed Length	7.49 m (24'7")
B Stowed Width	2.3 m (7'7")
C Stowed Height	2.28 m (7'6")
Stowed Length (Transport)	5.75 m (18'10")
Stowed Width (Transport)	2.3 m (7'7")
Stowed Height (Transport)	2.66 m (8'9")
D Wheelbase	2.3 m (7'7")
Ground Clearance	0.37 m (1'3")
Platform Size (L×W×H)	1.83 m x 0.85 m x 1.1 m (6' x 2'9" x 3'7")
Performance	
Max Platform Capacity	300 kg (661 lbs)
Max Platform Occupants	2 Persons
Drive Speed (Stowed)	4.5 km/h (2.8 mph)
Drive Speed (Raised)	1.0 km/h (0.6 mph)
Gradeability	40%
Turntable Rotation	360°/Non-continuous 355°/Discontinuous (Optional)
Platform Rotation	180°
Tilt Rating	5°
Turning Radius(Inside/Outside)	1.82 m/4.78 m (6'/ 15'8")
Turntable Tail-Swing	0.1 m(4")
Max Allowable Side Force	400 N (90 lbf)
Max Allowable Wind Speed	12.5 m/s (28 mph)
Tire Spec/Type	33×12D610 /foam-filled 33×12-20 /solid
Power	
Drive × Steer	4WD x 2WS
Engine	18.2 kW/3000 rpm/ D1105-EF02_CN4 /Kubota//EU stage V、EPA Tier 4F
Hydraulic Tank Capacity	112 L (24.6 gal (UK)/29.6 gal (US))
Diesel Tank Capacity	55 L (12.1 gal (UK)/14.5 gal (US))
System Voltage	12 V DC
Weight	
Weight	7,700kg (16,976 lbs)
Standards Compliance	GB/CE/ANSI/CSA/AS/EAC

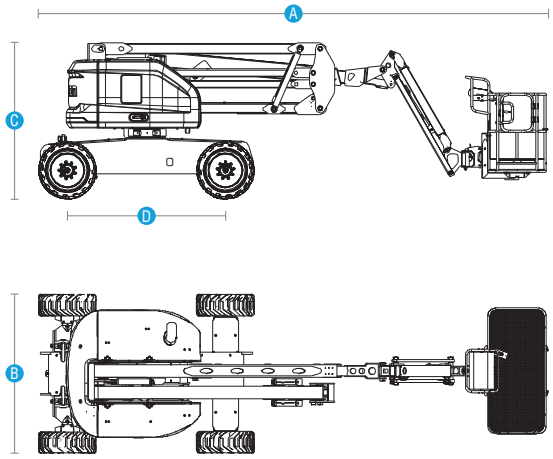

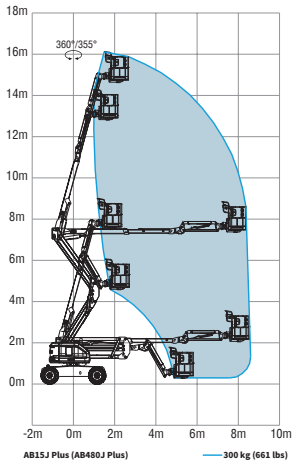

We reserve the right to make specification. The above represents the current specifications at time of publications. 3. 2024